ELECTRICAL LEGEND

- PENDANT LIGHT AND SWITCH
  NOTE: BATHROOM LIGHT TO BE SHROUDED
- LIGHT/ FAN CONTROL SWITCH
- DOUBLE SWITCHED SOCKET OUTLET
- DOUBLE SWITCHED SOCKET OUTLET ABOVE WORKTOP
- APPLIANCE CONTROL PANEL (ACP)
- SOCKET OUTLET
- COOKER CONTROL WITH LOW-LEVEL HOB IGNITION POINT
- EXTRACTOR FAN WALL MOUNTED TO KITCHEN
- SMOKE DETECTOR

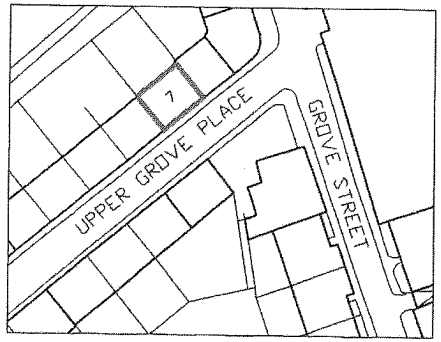

SITE LOCATION PLAN
SCALE 1:1250

DENOTES EXTENT OF BOUNDARY

*** DENOTES REQUIREMENTS OF EXISTING SASH AND CASE WINDOWS**

NEW 8000mm2 TRICKLE VENTILATOR TO BE FITTED
WINDOWS TO HAVE GLAZED AREA NO LESS THAN $\frac{1}{15}$ OF THE FLOOR AREA.
WORST CASE – $\frac{1}{15}$ = 7%.

WORST CASE EXAMPLE: FLOOR AREA = 16.7m2. AREA OF GLAZING = 2.52m2.
2.52/16.7
= 15%.
WINDOW TO HAVE OPENABLE AREA OF NO LESS THAN $\frac{1}{30}$ OF THE FLOOR AREA.
WORST CASE – $\frac{1}{30}$ = 3.3%. FLOOR AREA = 16.7

m2. OPENABLE AREA = 1.12m2.
1.12/16.7
= 6.7%.
WINDOW TO HAVE OPENABLE AREA OF MIN 0.33m2 AND MIN DIMENSIONS OF 450x450mm.

WARRANT NOTES

ALL MATERIALS TO BE IN ACCORDANCE WITH THE RELEVANT BRITISH STANDARDS.

DRAINAGE – NO JOISTS TO BE CUT OR NOTCHED

SMOKE DETECTORS FITTED IN ACCORDANCE WITH BS:5446:PART1:2000. MAINS OPERATED SMOKE DETECTOR WITH 72 HOUR STANDBY SUPPLY AND AUDIBLE WARNING THAT MAINS SUPPLY IS OFF WITH CAPACITY FOR WARNING OF SMOKE FOR A FURTHER 4 MINUTES. AUDIBLE WARNING TO BE GIVEN EVERY MINUTE WHEN STANDBY SUPPLY FALLS BELOW THAT REQUIRED TO SATISFY NECESSARY DURATION. ALARM TO BE CEILING MOUNTED, AT LEAST 300mm FROM ANY WALL OR LIGHT FITTING AND LOCATED NOT MORE THAN 7m FROM DOOR TO LIVING ROOM OR KITCHEN AND NOT MORE THAN 3m FROM DOOR TO A ROOM INTENDED TO BE USED AS SLEEPING ACCOMMODATION. TO BE MEASURED HORIZONTALLY.SMOKE DETECTORS TO BE INTERLINKED WHERE TWO OR MORE ARE PROPOSED

KITCHEN/LOUNGE EXTRACT RATE OF 60 LITRES PER SECOND CONTINUOUS TRICKLE VENT 8000MM2 FITTED TO WINDOW– EXTRACT CONCEALED WITHIN HIGH LEVEL BOXING. FAN TO HAVE VARIABLE SPEED FUNCTION

NEW DRAINAGE PIPEWORK TO BE MUPVC IN ACC/ WITH BS EN 12056-2:2000 CONNECTED TO EXISTING VENTILATED SYSTEM.
ALL PIPEWORK TO BE SUPPORTED IN ACC/ WITH MANUFACTURER'S RECOMMENDATIONS. ALL DRAINAGE TO BE ADEQUATELY STRENGTHENED AND SUPPORTED OVER ITS ENTIRE LENGTH.
ACCESS TO BE PROVIDED AT TRAPS AND CHANGES IN DIRECTION.
TRAPS TO BE 75mm DEEP SEAL.
AAV TO BE INSTALLED IN ACCORDANCE WITH BS EN 12380

ELECTRICAL INSTALLATION TO COMPLY WITH RELEVANT REQUIREMENTS OF BS 7671:2001.
LIGHT SWITCHES TO BE POSITIONED BETWEEN 900MM–1200MM.
STANDARD SWITCHED/UN-SWITCHED SOCKET OUTLETS TO BE POSITIONED MIN. 400MM ABOVE FLOOR LEVEL AND 150MM ABOVE WORKTOPS
OUTLETS AND CONTROLS FOR ELECTRICAL FIXTURES AND SYSTEMS TO BE POSITIONED AT LEAST 350MM FROM INTERNAL CORNERS OR OBSTRUCTIONS AND NOT MORE THAN 1200MM ABOVE FLOOR LEVEL

ACTIVITY SPACE 1000x600 INFRONT OF COOKER. KITCHEN UNITS TO PROVIDE 1 CUBIC METRE OF STORAGE.
ANY NEW CORRIDOR FORMED TO BE MINIMUM 1050mm WIDE. ANY NEW DOOR TO HAVE A CLEAR OPENING WIDTH OF 775mm MINIMUM

NEW GAS COOKER INSTALLED. ALL GAS FIRED APPLIANCES ARE TO BE INSTALLED IN ACCORDANCE WITH THE GAS SAFTEY (INSTALLATIONS AND USE) REGULATIONS 1998, AND BY A BUSINESS OR INDIVIDUAL WHO IS CORGI REGISTERED

DESIGNATED DRYING SPACE SUITABLE FOR 1.7M PER APARTMENT OVER BATH

KITCHEN EXTRACT TAKEN WITHIN HIGH LEVEL BOXING TO OUTSIDE. TERMINATED VIA WALL MOUNTED VENT. VENT TO PREVENT THE INGRESS OF MOISTURE AND INSECT INFESTATION

50mm AAV
– TO HAVE BBA CERTIFICATE.
– TO TERMINATE ABOVE FLOOD LEVEL OF HIGHEST APPLIANCE MIN 150mm.
– TO BE CONTAINED WITHIN ACCESSIBLE AND VENTILATED BOXING

FALL OF NEW SINK 50mm PVC WASTE TO BE 1:40 AT ALL TIMES

NEW WASTE PIPE WILL BE BOXED IN ABOVE EXISTING FLOOR LEVEL AND TERMINATE AT EXISTING CONNECTION TO SVP USING A PROPIETARY CONNECTOR ACCESS BENDS AT ALL CHANGES OF DIRECTION

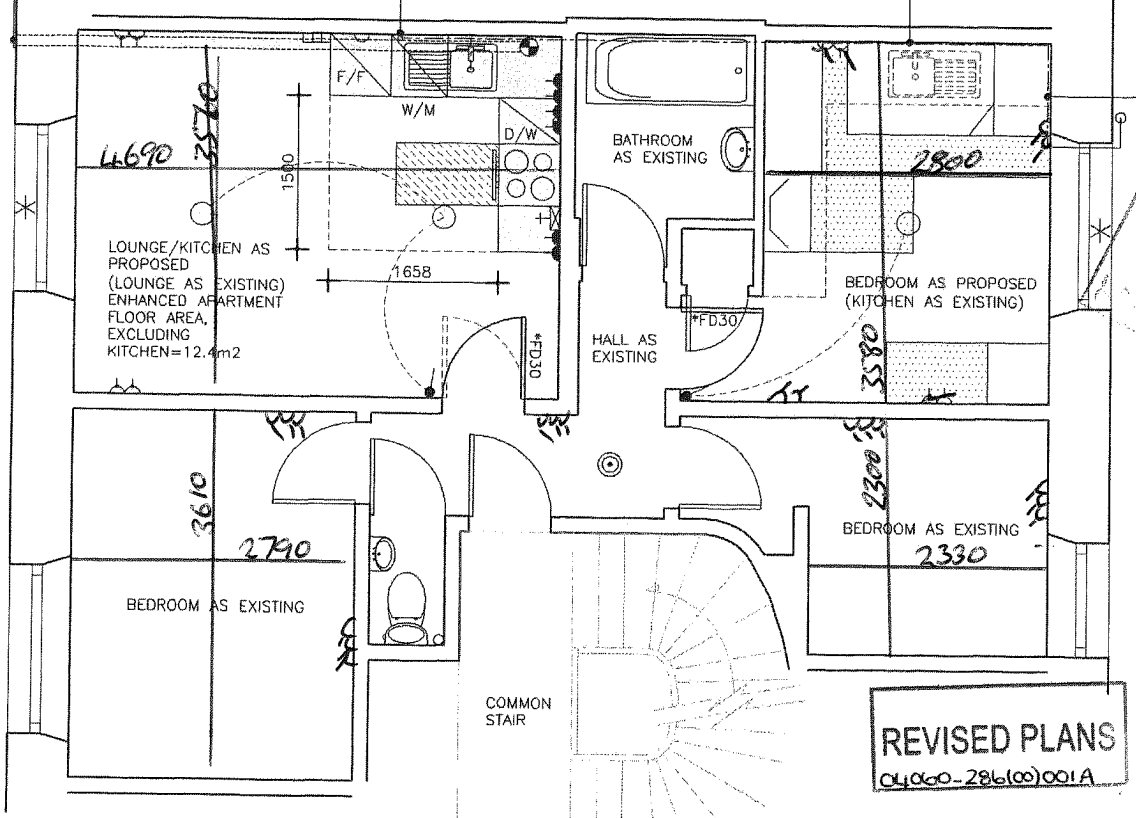

REVISED PLANS
04060-286(00)001A

GENERAL LAYOUT 1:50

REV. A:
AMENDED IN ACCORDANCE WITH BUILDING CONTROL REPORT

*FD30
NEW 30 MINUTE SELF CLOSING FIRE DOOR WITH INTUMESCENT STRIPS AND SMOKE SEALS

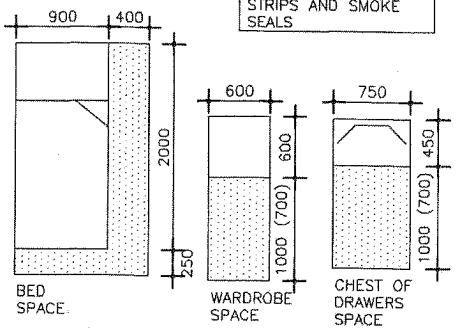

ema
ARCHITECTURE + DESIGN

GRANT DEVELOPMENT
FLAT ALTERATIONS
7(2F1) Upper Grove Street, EDINBURGH

PROPOSED PLAN
BUILDING WARRANT DRAWING

SCALE	AS SHOWN	DO NOT SCALE FROM THIS DRAWING
DATE	05.05.07	THIS DRAWING IS COPYRIGHT ©
DRAWN BY	JM	ANY DISCREPANCIES TO BE REPORTED TO EMA

04060_286(00)001A

STATUS WARRANT REVISION

CHARTERED ARCHITECTS
The Stables, 38 Boileyfield Road,
EDINBURGH EH15 1NA
T: 0131 466 6595
F: 0131 466 6596
E: info@ema-architects.co.uk